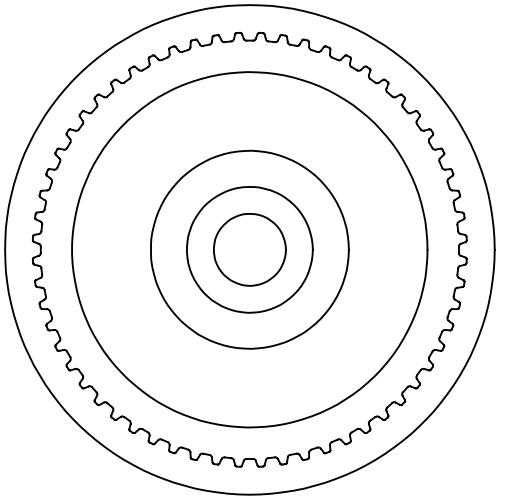

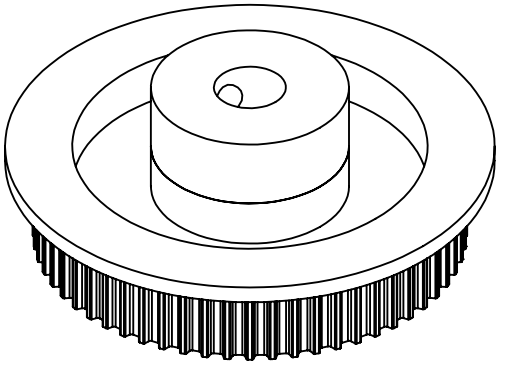

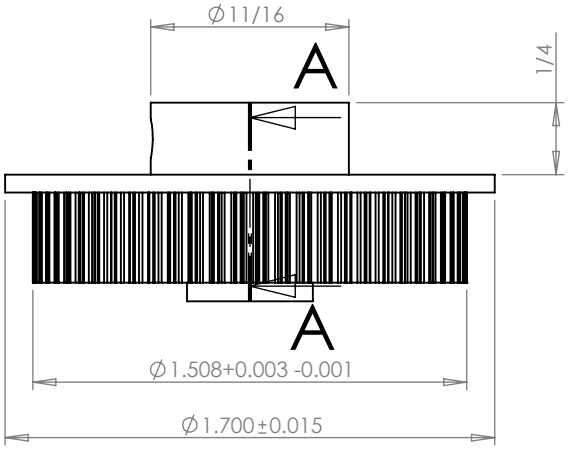

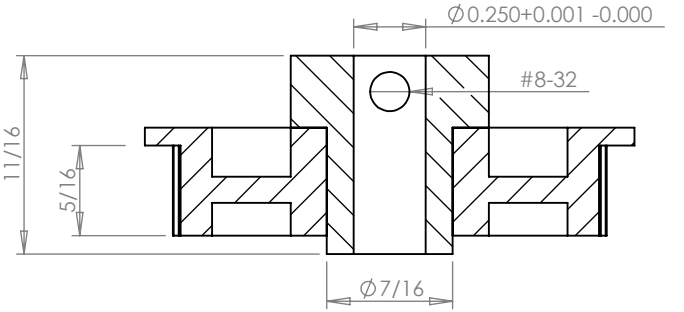

SECTION A-A

PLASTOCK ® **Manufactured by Putnam Precision Molding**	**Part Number:** 60T0800SFAH1S
www.plastock.biz © 2010 Putnam Precision Molding	**Part Description:** .0800" Pitch (MXL) Timing Belt Pulleys For Belts up to 1/4" Wide

Dimensions are in inches
Tolerances:
Fractional ± 0.015

PROPRIETARY AND CONFIDENTIAL : THE INFORMATION CONTAINED IN THIS DRAWING IS THE SOLE PROPERTY OF PUTNAM PRECISION MOLDING. ANY REPRODUCTION IN PART OR AS A WHOLE WITHOUT THE WRITTEN PERMISSION OF PUTNAM PRECISION MOLDING IS PROHIBITED. INFORMATION IN THIS DRAWING IS PROVIDED FOR REFERENCE ONLY.